PRODUCT DATA SHEET



PRODUCT CODE
PRO416FF

RANGE
MPRO

DESCRIPTION
Bath Shower Mixer Brushed Brass

WEBSITE LINK Click Here

CATEGORY	Brassware
WARRANTY DETAILS	15 Years
COLOUR	Brushed Brass
FINISH APPLICATION	PVD
PRIMARY MATERIAL	Brass
INSTALL TYPE	Floor Mounted
PRODUCT WIDTH MM	150
PRODUCT HEIGHT MM	1125
PRODUCT LENGTH MM	237
PRODUCT NET WEIGHT KG	8.7
MINIMUM PRESSURE (BAR)	0.5
MAX WORKING PRESSURE (BAR)	6

STANDARDS	BS EN 200:2008, BS EN 817:2008
APPROVAL	WRAS 240404016
NUMBER OF OUTLETS	2
NUMBER OF FUNCTIONS	2
HEADWORK	35mm Single lever ceramic cartridge
SPOUT PROJECTION	238
SWIVEL SPOUT	No
INLET CONNECTIONS THREAD	G1/2”
FLOW REGULATOR	Neoperl Aerator
WASTE INCLUDED	No
ANTI-SCALD PROTECTION	No
ENERGY SAVING	No

PRESSURE (BAR)	**0.2**	**0.5**	**1**	**2**	**3**	**4**	**5**
PRIMARY FLOWRATE		6.188	8.942	12.818	15.861	18.437	20.638
HANDSET FLOWRATE	2.38	4.62	7.24		13.09		17.63
MASSAGE FLOW RATE							
AIR FLOW RATE							
WIRE FLOW RATE							
WATERFALL FLOW RATE							
MIST FLOW RATE							
HANDSPRAY FLOW RATE							

TECHNICAL DIMENSIONS

Dimensions in mm unless otherwise specified.

Tolerances (per material type) apply.

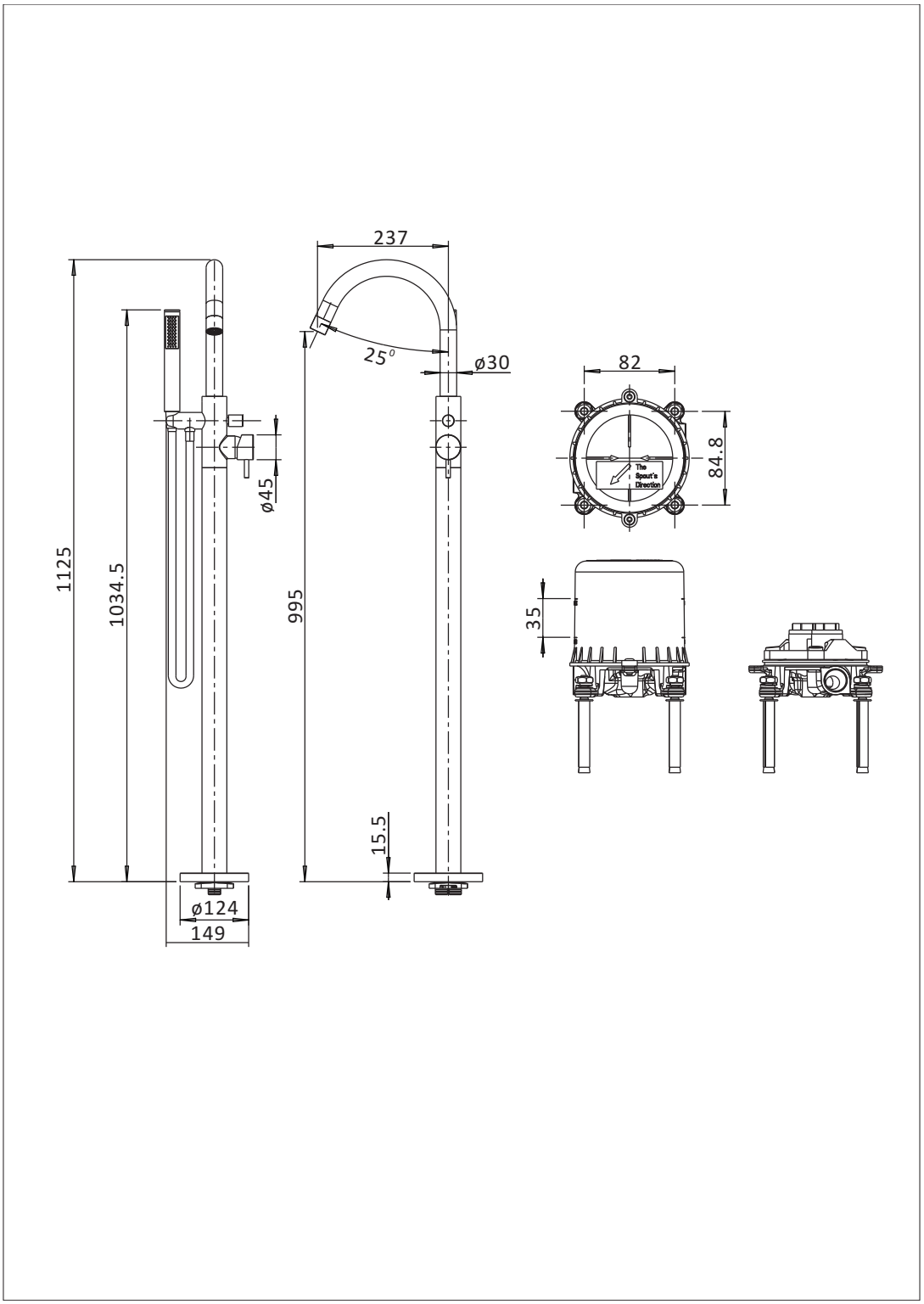

SPARES LIST

Only the parts labelled are available as spares.

NUMBER	PART CODE	DESCRIPTION
1	PRO416BASERINGF	PRO416 Base Ring Brush Brass
2	PRO416AERATORF	PRO416 Aerator Housing & Aerator BB
3	PRO416SPOUTASF	PRO416 Spout Assembly Brush Brass
4	PRO416CARTCOVERF	PRO416 Cartridge Cover & Nut Brush Brass
5	PRO416LEVERF	PRO416 Lever Brush Brass
6	S2A404Z3	Shower Hose for PRO416/450 Brush Brass
7	PRO416DIVERTER	PRO416 Diverter no Cap